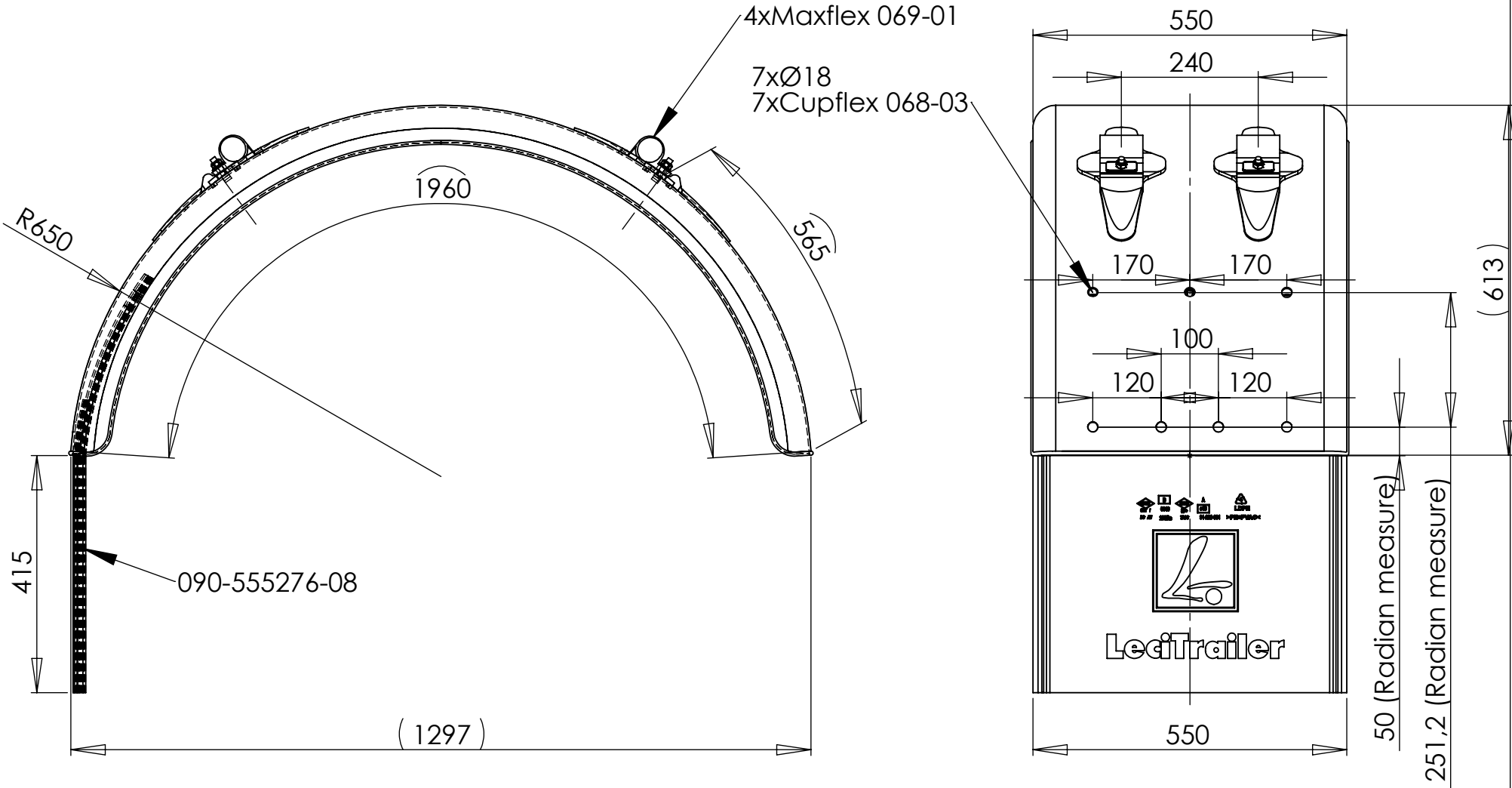
4xMaxflex 069-01
7xØ18
7xCupflex 068-03
1960
565
R650
415
090-555276-08
(1297)
550
240
170
170
100
120
120
(613)
50 (Radian measure)
251,2 (Radian measure)
550
LeciTrailer